SMARTHOMEBUS

Generation-4 SBUS

SB-VIP15T-UN

Hotel VIP Service Requester Panel

Simplified Energy Master Control Switch with Delay Timer, BUS Enabled. Including 3back let Buttons for service request: DND, Clean, Laundry)

technical data

Touch Button Allocation
15 Smart Buttons

Extra features
- Each button has a dual color LED for background and working status indication
- Auto sleep to reduce the current consumption when idle
- Easy sBUS connector tech.

Control Applications
lighting, HVAC, IR, moods and scenes, hotel guest room service

Installation
- wall Mount metal frame twist
- Magnetic screw less mounting
- Advanced security locking
- Easy SBUS connector tech.

Compliance
CE Mark EMC

Total Gangs
This Touch panel is equal to 20 gangs

Control IO
1 x Advanced RS485 S-BUS serial port links (both train & screw link types)

Upgrade IO
1 x mini USB port (to connect to special programming board)

Operation Protection
- BUS RV. Polarity Protection
- BUS Short Circuit Protection

SBUS DC Supply
24VDC with flexible tolerance between 8-32VDC. Flexible ability to add power supply as to be needed any where
Power consumption: max 50mA

Operating Environment
0° to 45°C ambient temperature
20% to 93% RH

Enclosure material
Aluminum, Glass, and poly

Dimensions & Weight
L168mm x W100mm x H14.6mm; weight:0.23kg

control compatibility

• Lighting • Climate • Curtains • Moods • Service

commercial

GTIN (UPC-EAN): **0610696254825**
Patent P. No:

0 610696 254825

SMARTHOMEBUS

SB-VIP15T-UN

Generation-4 SBUS

connection diagram

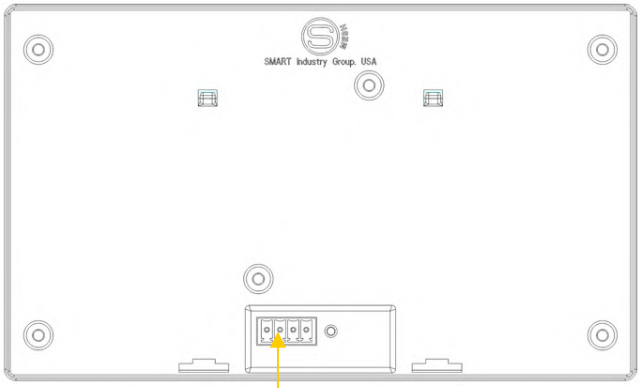

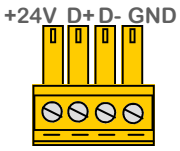

S.BUS Connector

mounting dimensions

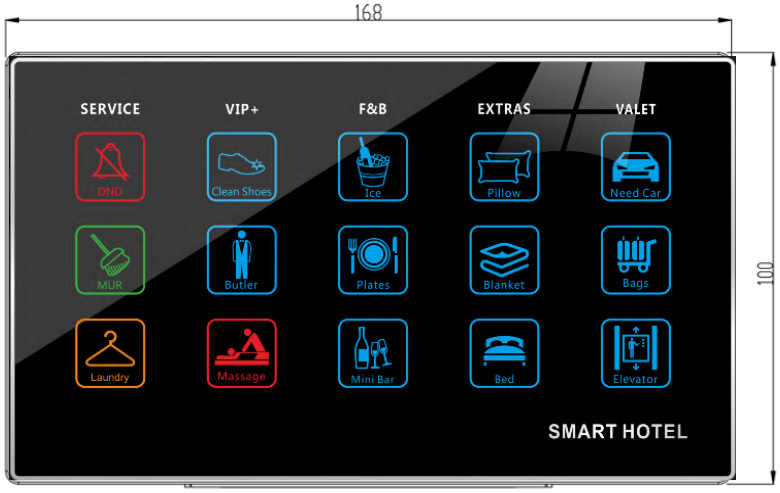

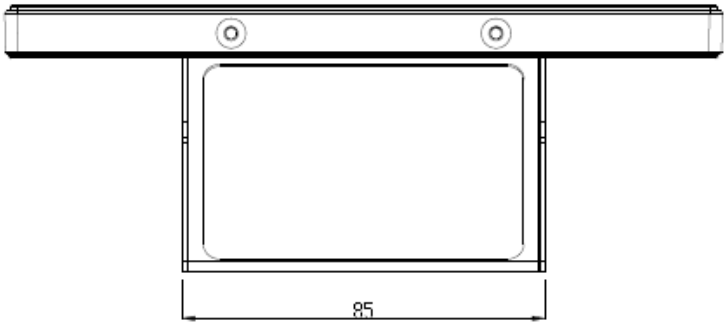

PROSPECTIVE

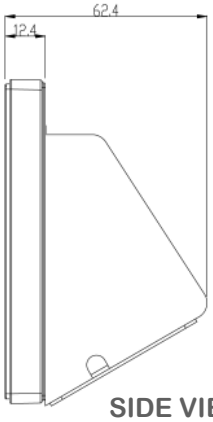

SIDE VIEW

S-BUS connection

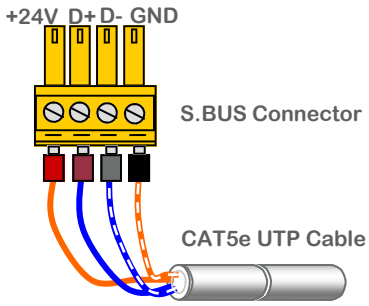

SMART GROUP

www.smarthomebus.com • info@smarthomebus.com
USA - Germany - Denmark - Hong Kong - Jordan - China - UAE

UTP core colors

S.BUS +24V	orange
S.BUS GND	w/orange
S.BUS D+	blue
S.BUS D-	w/blue
Spare	green
Spare	w/green
Spare +12v	brown
Spare -12V	W/brown

SB-G4 Data Sheet Rev 2.0 released Dec.2012

Specifications subject to change without notice. © Smarthome® -Group Trading as Smart-BUS®. Texas 77043 - USA. All rights reserved. Smart Mesh® , Smarthome BUS® and all other associated logos are the registered trademarks of Smart-Group® . Not to be used nor reproduced without written permission. All Patents and IPO's Remain owned by SmartHome® Group